SunPumps 120V Brushless DC
SCB Pumps 10 GPM Impeller

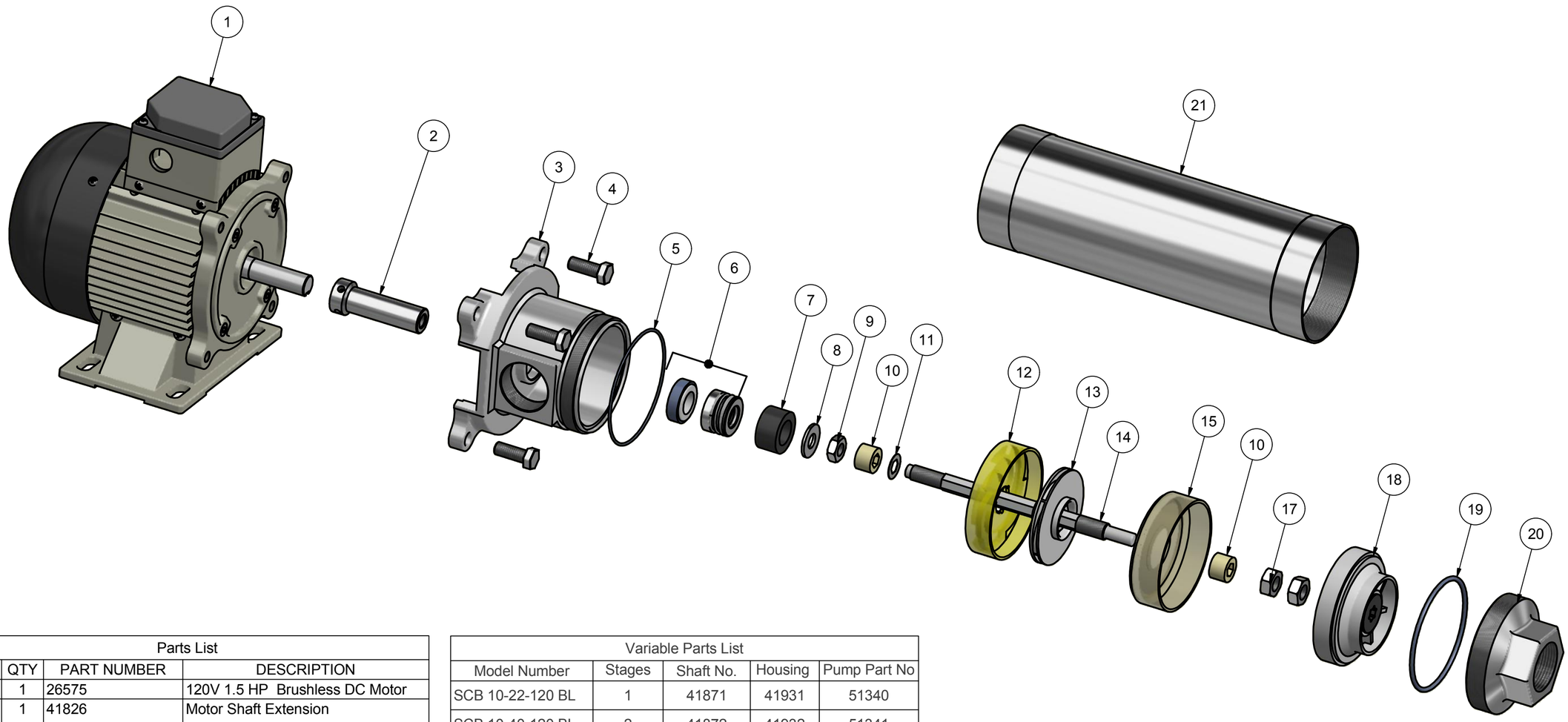

Parts List			
ITEM	QTY	PART NUMBER	DESCRIPTION
1	1	26575	120V 1.5 HP Brushless DC Motor
2	1	41826	Motor Shaft Extension
3	1	41800	Motor Adapter, SCB
4	4	19650	Bolt, 3/8-16 X 1 SS
5	1	38820	O-Ring, 042
6	1	28520	Seal Assembly, Viton
7	1	41824	Seal Spacer, 3-4 X .655
8	1	22175	Washer, 7/16 SS
9	1	20000	Nut, 7-16 X 1-4, SS
10	2	41822	Spacer, Impeller 7/16 X 1/2
11	1	41820	Shim, 7/16 Hex X .015
12	Chart	41854	Diffuser, 7-10 GPM
13	Chart	41850	Impeller, 10 GPM
14	1	See Chart	Pump Shaft
15	1	41840	Diffuser Cage, 7-10
17	2	20085	Nut, 1/2 - 20, SS
18	1	41830	SCB Bearing Assembly
19	1	38850	O-Ring, 236
20	1	41805	Suction End Bell, SCB
21	1	See Chart	Housing, SCB

Variable Parts List				
Model Number	Stages	Shaft No.	Housing	Pump Part No
SCB 10-22-120 BL	1	41871	41931	51340
SCB 10-40-120 BL	2	41872	41932	51341
SCB 10-60-120 BL	3	41873	41933	51342
SCB 10-75-120 BL	4	41874	41934	51343
SCB 10-90-120 BL	5	41875	41935	51344
SCB 10-105-120 BL	6	41876	41936	51345
SCB 10-120-120 BL	7	41877	41937	51346
SCB 10-135-120 BL	8	41878	41938	51347
SCB 10-150-120 BL	9	41879	41939	51348
SCB 10-160-120 BL	10	41880	41940	51349

DRAWN James C. Allen	10/30/2012	**SunPumps, Inc.**
CHECKED		TITLE 120V Brushless DC SCB Pumps 10 GPM Impeller
QA		
MFG		
APPROVED		SIZE C / DWG NO EV-SCB-10GPM-120V / REV
		SCALE / SHEET 1 OF 1