/ JMS-FA

JMS-FA SunSpec
Rapid Shutdown Device

A streamlined, module-level rapid shutdown solution



IMAGE FOR ILLUSTRATIVE PURPOSES ONLY

- **Screwless design for quick and easy mounting**
- **Higher-PV Module compatibility due to high input current**
- **Enhanced compatibility to SMA product portfolio**

Rapid Shutdown CERTIFIED

Cost-effective
- Simple plug-and-play installation
- No additional components necessary, reducing balance of system costs
- One solution for both residential and commercial

Simple and robust
- Power line based communication certified for compatibility with the SunSpec signal for rapid shutdown
- Shuts down PV module whenever SunSpec signal is interrupted
- Screwless design for quick and easy mounting

Safe and certified
- Certified and listed for compliance to:
  - » UL 1741 Rapid Shutdown System Equipment
  - » NEC 2023/2020/2017 690.12(B)(2) Rapid Shutdown of PV Systems on Buildings

Reduced risk
- Technical support from SMA's #1 ranked service organization
- Fully SunSpec certified solution when paired with approved SMA SunSpec certified inverters

The SunSpec Certified Rapid Shutdown System (model JMS-FA), available from SMA, is the most cost-effective and reliable solution for fulfilling NEC 2023/2020/2017 Rapid Shutdown requirements.

The module-level device is certified for compatibility with the SunSpec communication signal and SMA inverters, making compliance simple and easy. By using the existing DC lines between the inverter and PV array for power line communications, installation and labor are significantly reduced. No additional wires or communication equipment is needed. The solution also features up to 50% fewer internal components vs alternatives, resulting in greater lifetime reliability.

Technical data	JMS-FA
Input (DC)	
Rated DC input power	800 Wp
Maximum PV module open circuit voltage (Voc)	64 V
Minimum input voltage	10 V
Maximum continuous input current I_{MAX}	20 A
Maximum short-circuit input current I_{SC}	25 A
Output (DC)	
Output power range	0 W to 800 W
Standby output voltage	1 V
Maximum system voltage	1500 V
Allowable series string connections	6 to 30 JMS-FA devices
Mechanical	
Dimensions L / W / H	89 x 96.5 x 18.5 mm (3.5 x 3.8 x 0.73 in)
Weight (including cables)	0.97 lb (439 g)
Input / output connector	Staubli MC4
Output wire length	1.2 m
Operating temperature range	−40°C to +75°C (−40°F to +167°F)
Enclosure rating	Type 4X (as per UL 50E)
Relative humidity	0% to 100%
Features and compliance	
Certification	UL 1741 Rapid Shutdown Equipment
Communication mode	Power Line Communication (PLC)
SunSpec Rapid Shutdown Communication Protocol	SunSpec Certified
Rapid shutdown time	10 seconds
Warranty (contact SMA Service Line)	25 years
SunSpec Certified SMA inverters	Sunny Boy Smart Energy (SBSE x.x-US-50) Sunny Tripower X 50-US (STP xx-US-50) Sunny Tripower CORE1-US (STP xx-US-41) Sunny Tripower X 80-US (STP xx-US-80)
Type designation	JMS-FA
SMA part number	119814-00.03
Package quantity	40

SYSTEM DIAGRAM

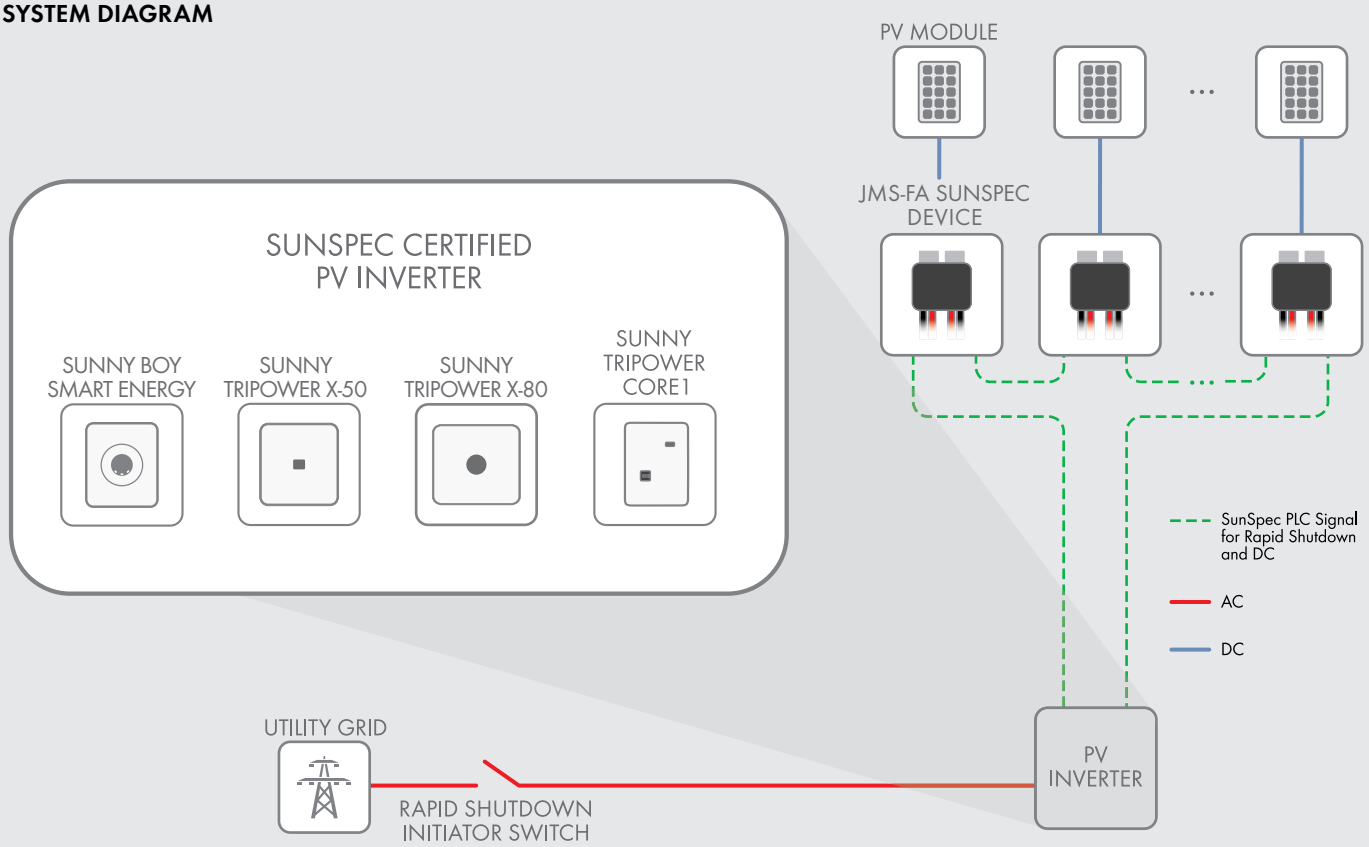

Toll Free +1 888 4 SMA USA
www.SMA-America.com

SMA America, LLC

SMASunSpecRSD-DSen..us-32 SMA and Sunny Boy are registered trademarks of SMA Solar Technology AG. JMS-FA manufactured by JMTHY Technology Co. Ltd., China for SMA America, LLC.
Printed on FSC-certified paper. All products and services described as well as technical data are subject to change, even for reasons of country-specific deviations, at any time without notice. SMA assumes no liability for errors or omissions. For current information, see www.SMA-Solar.com.