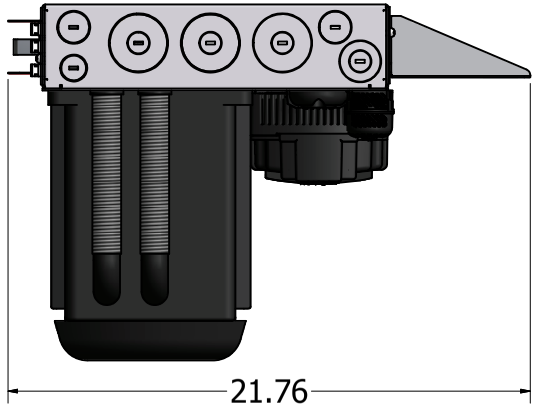

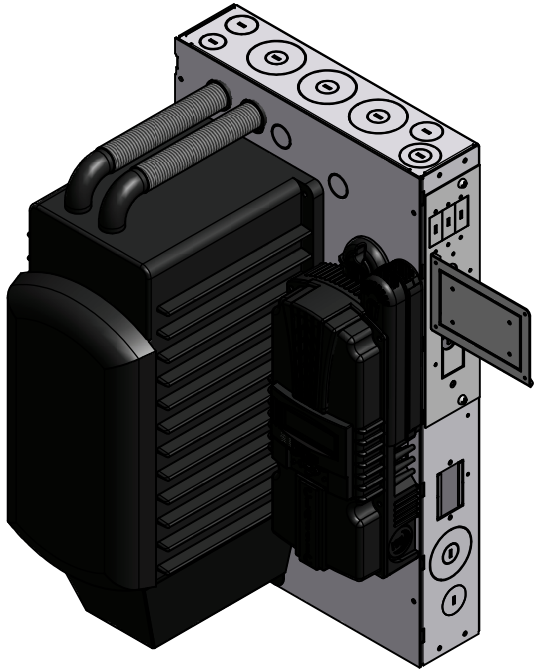

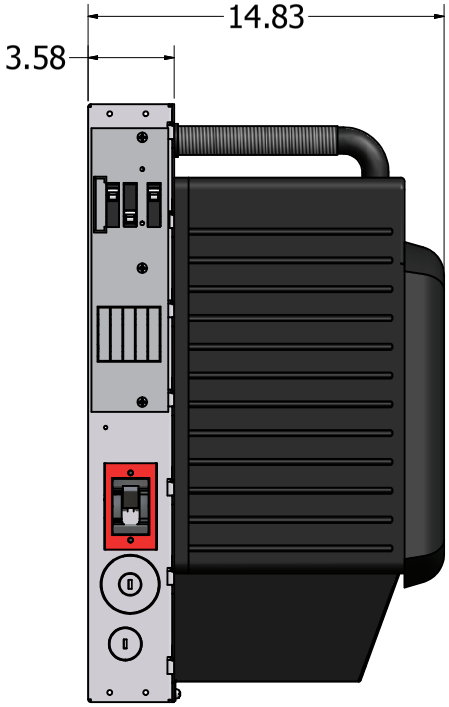

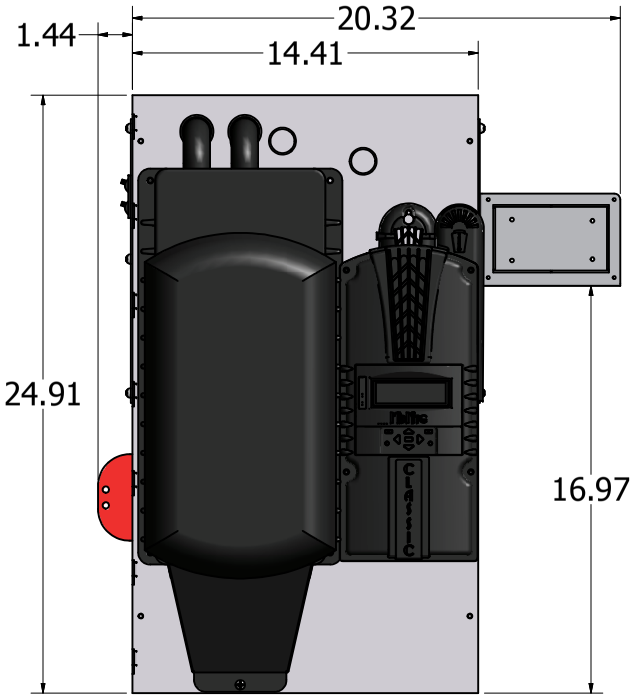

DRAWN Robin Gudgel	6/17/2009	Midnite Solar
CHECKED		TITLE
QA		E-Panel Plus
MFG		
APPROVED		SIZE C / DWG NO E-Panel Plus dims / REV new
		SCALE / SHEET 1 OF 1