IQ Battery 5P

The IQ Battery 5P all-in-one AC-coupled system is powerful, reliable, simple, and safe. It has a total usable energy capacity of 5.0 kWh and includes six embedded grid-forming microinverters with a 3.84 kVA continuous power rating. It provides backup capability, and installers can quickly design the right system size to meet the customer needs.

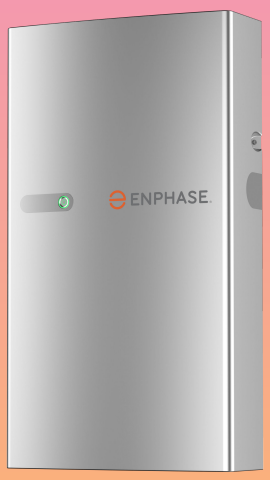

Enphase 15 year limited warranty

UL CERTIFIED SAFETY US-CA E488100

Key specifications	
Rated (continuous) output power	3.84 kVA
Rated output current (@240 VAC)	16 A
Interconnection	Single-phase
Nominal voltage	240 VAC
Nominal frequency	60 Hz
Usable capacity	5.0 kWh
Ambient operating temperature range (charging)	–20°C to 50°C (–4°F to 122°F) Non-condensing
Ambient operating temperature range (discharging)	–20°C to 55°C (–4°F to 131°F) Non-condensing
Chemistry	Lithium iron phosphate (LFP)
Mounting	Wall-mount or pedestal-mount (sold separately)

Dimensions in inches

Wall-mounted

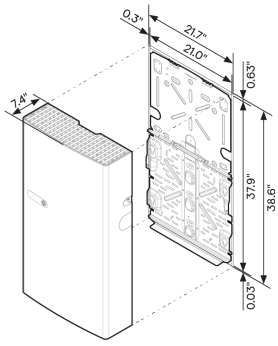

Floor-mounted with pedestal

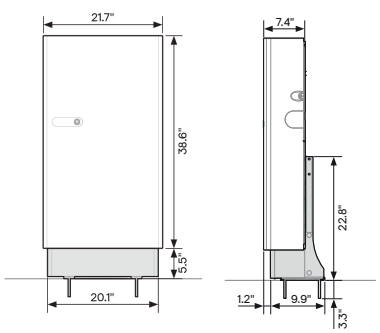

[1] Follow all installation instructions and local codes and requirements of the Authority Having Jurisdiction (AHJ) when installing the Enphase Energy System.

Powerful

- Delivers 3.84 kVA continuous and 7.68 kVA peak power
- Doubles the power per kWh compared to previous IQ Battery models
- Features six embedded microinverters

Reliable

- 15-year limited warranty
- Passive cooling with no moving parts or fans
- Wired communication for stable and fast connection
- Remote software and firmware updates

Simple

- Integrated AC battery system
- Quick installation and commissioning
- Supports Backup, Self-Consumption, and time-of-use (TOU) modes
- Remote monitoring via the Enphase App
- Field replaceable components

Safe

- Meets UL 9540A thermal runaway fire standards[1]
- Uses Lithium Iron Phosphate (LFP) chemistry for safety and longevity

© 2024 Enphase Energy. All rights reserved. Enphase, the e and CC logos, and certain other marks listed at https://enphase.com/trademark-usage-guidelines are trademarks of Enphase Energy, Inc. in the U.S. and other countries. Data subject to change.

Product details	IQ Battery 5P
Model number	IQBATTERY-5P-1P-NA or B05-T02-US00-1-3
Ordering SKU	IQBATTERY-5P-1P-NA: Standard ordering SKU IQBATTERY-5P-1P-NA-DOM[2]: Ordering SKU with US domestic content
Description	The IQ Battery 5P system with integrated IQ Microinverters (SKU: IQ8D-BAT or IQ8D-BAT-DOM) and battery management system (BMS) with battery controller

Limited warranty	
IQ Battery 5P unit	>60% capacity, up to 15-year or 6,000 cycles[3]

Output (AC)	@240 VAC
Rated (continuous) output power[4]	3.84 kVA
Peak output power	7.68 kVA (three seconds), 6.14 kVA (ten seconds)
Nominal voltage/range	240/211–264 VAC
Nominal frequency/range	60/57–63 Hz
Rated output current (@240 VAC)	16 A
Peak output current (@240 VAC)	32 A (three seconds), 25.6 A (ten seconds)
Power Start capability	Up to 48 A LRA[5]
Power factor (adjustable)	0.85 leading···0.85 lagging
Maximum units per 20 A branch circuit	One unit (single-phase)
Maximum conductor size supported	3 AWG
Overcurrent protection device (OCPD) for 3 AWG cable	80 A
Interconnection	Single-phase
AC round-trip efficiency[6]	90%

Battery	
Total capacity	5.0 kWh
Usable capacity	5.0 kWh
DC round-trip efficiency	96%
Nominal DC voltage	76.8 V
Maximum DC voltage	86.4 V
Ambient operating temperature range (charging)	–20°C to 50°C (–4°F to 122°F) non-condensing
Ambient operating temperature range (discharging)	–20°C to 55°C (–4°F to 131°F) non-condensing
Optimum operating temperature range	0°C to 30°C (32°F to 86°F)
Chemistry	Lithium iron phosphate (LFP)

Mechanical data	
Dimensions (H x W x D)	980 mm × 550 mm × 188 mm (38.6 in × 21.7 in × 7.4 in)

[2] This ordering SKU is manufactured in the US with some imported parts. The battery cover kit, chassis, BMS, inverter electrical parts, and enclosures are domestically manufactured to qualify for the ITC domestic content bonus adder.
[3] Whichever occurs first. Restrictions apply.
[4] Supported in both grid-connected and backup/off-grid operations.
[5] Power Start capability may vary.
[6] AC to the battery to AC at 50% power rating.

Mechanical data	
Lifting weight	66.3 kg (146.1 lb)
Total installed weight	78.9 kg (174 lb)
Enclosure	Outdoor-NEMA 3R
IQ8D-BAT Microinverter enclosure	NEMA type 6
Cooling	Natural convection
Altitude	Up to 2,500 meters (8,202 feet)
Mounting	Wall-mount or pedestal-mount (sold separately)

Features and compliance	
Compatibility	Compatible with IQ and M Series Microinverters, IQ System Controller 3/3G, IQ Combiner 5/5C, and IQ Gateway for grid-tied and backup operation
Communication	Wired control communication
Services	Backup, Self-Consumption, TOU, and NEM integrity
Monitoring	Enphase Installer Platform and Enphase App monitoring options; API integration
Compliance[7]	CA Rule 21 (UL 1741-SA), IEEE 1547:2018 (UL 1741-SB, 3rd Ed.) CAN/CSA C22.2 No. 107.1-16 UL 95406, UL 9540A, UN 38.3, UL 1998, UL 991, NEMA Type 3R, AC156 EMI: 47 CFR, Part 15, Class B, ICES 003 Cell module: UL 1973, UN 38.3 Inverters: UL 62109-1, IEC 62109-2

What's in the box	
IQ Battery 5P unit	IQ Battery 5P unit (B05-T02-US00-1-3)
ID cover and conduit cover	IQ Battery 5P cover with two conduit covers for the left and right sides of the unit
Bottom mounting bracket and top shield	Bottom mounting bracket for mounting the battery on the wall. One top shield is required for UL 9540A
M5 seismic screws	Two M5 seismic screws for securing the battery unit on the bottom mounting bracket
M4 grounding screws	Two M4 grounding screws for securing the top shield on the bottom mounting bracket
M5 ID cover grounding screws	Two M5 ID cover grounding screws for the EMI/EMC requirement
Cable ties	Six cable ties for securing field cables to the unit
Control (CTRL) connector	Spare CTRL connector without resistor for CTRL wiring
Control (CTRL) connector with resistor	Spare CTRL connector with resistor for CTRL wiring
Quick install guide (QIG)	QIG for IQ Battery unit installation instructions

Optional accessories and replacement parts	
IQ8D-BAT-RMA	IQ8D-BAT Microinverter for field replacement
B05-T02-US00-1-3-RMA	IQ Battery 5P Battery unit for field replacement
B05-CX-0550-O	IQ Battery 5P cover for field replacement
B05-PI-0550-O	IQ Battery 5P pedestal mount
B05-CP-096-O	IQ Battery 5P conduit plates for field replacement. Includes one left-side and one right-side conduit plate

[7] Following local standards, choose a well-ventilated, non-habitable indoor location (like a 2-car garage) or an outdoor location where the ambient temperature andhumidity are within –4°F to 131°F (–20°C to 55°C) and 5% to 95% RH, non-condensing. Avoid direct sunlight to ensure the temperature stays in the optimal operating range. This ensures charging and discharging currents are not de-rated due to temperature. The full performance will occur within 59°F to 113°F (15°C to 45°C) while charging and within 41°F to 122°F (5°C to 50°C) while discharging.

Optional accessories and replacement parts	
B05-WB-0543-O	IQ Battery 5P wall bracket for field replacement. Includes one bottom mounting bracket and one top shield
IQBATTERY-HNDL-5	IQ Battery 5P lifting handles. Includes one left-side and one right-side lifting handle
B05-ACFB-080-O	IQ Battery 5P AC filter board for field replacement
B05-BMSNA-0490-O	IQ Battery 5P BMS board for field replacement
B05-CANB-063-O	IQ Battery 5P control communication board for field replacement
B05-NICS-0524-O, B05-NUCS-0524-O	IQ Battery 5P control switch is preinstalled on the wiring cover for field replacement

Components of the Enphase Energy System



IQ Microinverters

IQ Series Microinverters pack more power into less space than other rooftop solar systems and make rooftop solar more productive, reliable, smart, and safe.



IQ Gateway

The IQ Gateway with Current Transformers provides complete control and insight into the Enphase Energy System.

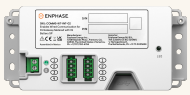

Communications Kit 2 INT

The Communications Kit 2 INT enables wired communication between the battery and gateway for grid-tied operation.



IQ Battery 5P accessories

The IQ Battery 5P lifting handles are reusable and ease the installation process. The IQ Battery 5P pedestal enables floor mounting of the IQ Battery 5P.

Revision history

Revision	Date	Description
DSH-00010-7.0	August 2024	Added IQBATTERY-5P-1P-NA-DOM SKU information.
DSH-00010-6.0	May 2024	• Updated safety section on page 1. • Updated the document to a new template.
DSH-00010-5.0	February 2024	Updated the SKU on page 1.
DSH-00010-4.0	November 2023	Updated the “Output (AC)” table.
DSH-00010-3.0	September 2023	• Updated product images. • Editorial updates.
DSH-00010-2.0	July 2023	• Added battery isometric view on the first page. • Editorial updates.
DSH-00010-1.0	May 2023	Initial release.